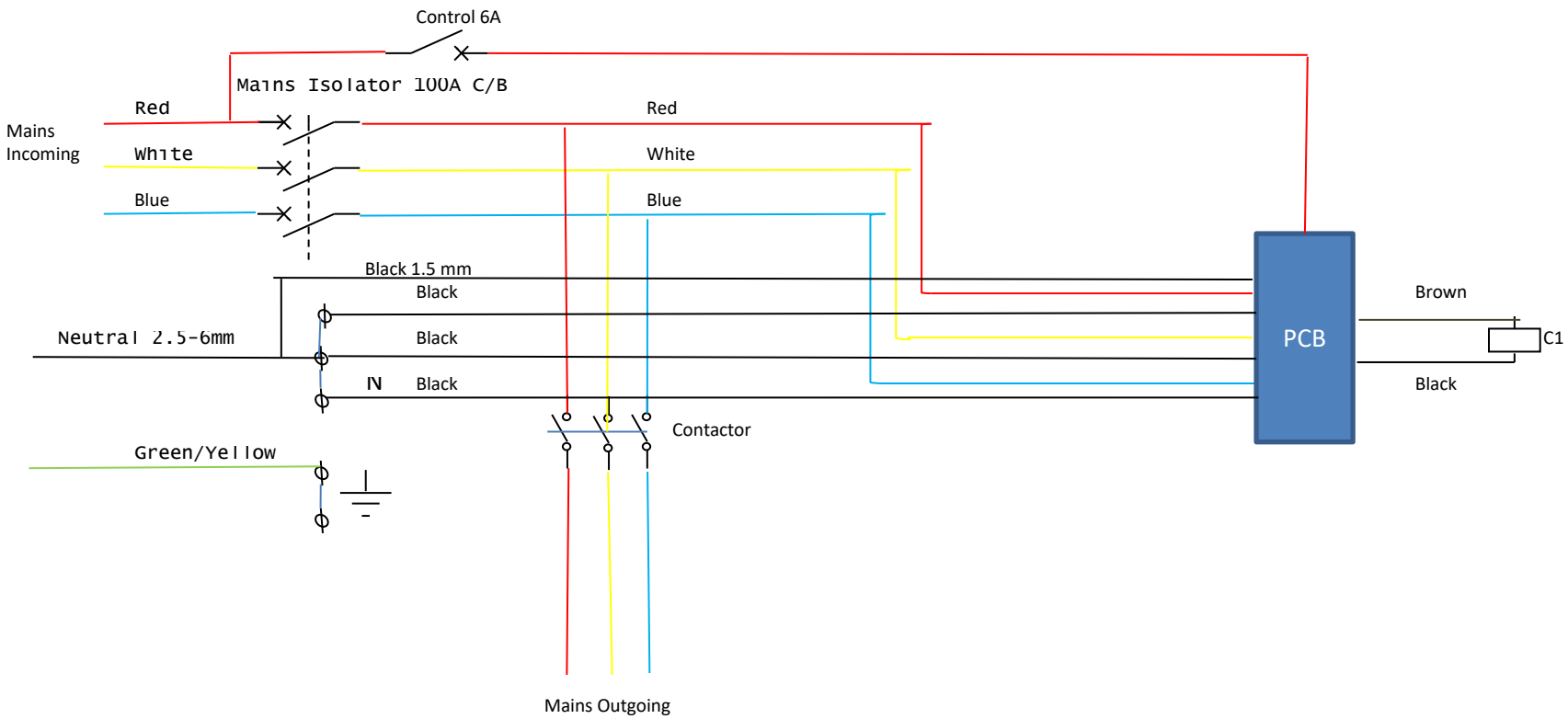
Control 6A
Mains Isolator 100A C/B
Mains
Incoming
Red
White
Blue
Red
White
Blue
Black 1.5 mm
Black
Neutral 2.5-6mm
Black
N
Black
Green/Yellow
Contactor
PCB
Brown
C1
Black
Mains Outgoing